P00270-RX-BK组装说明书.pdf 1 2021/11/30 19:28:04

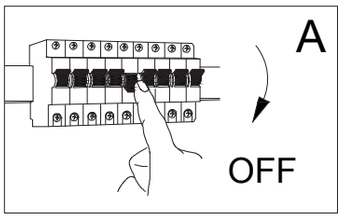

rabalux® 6670
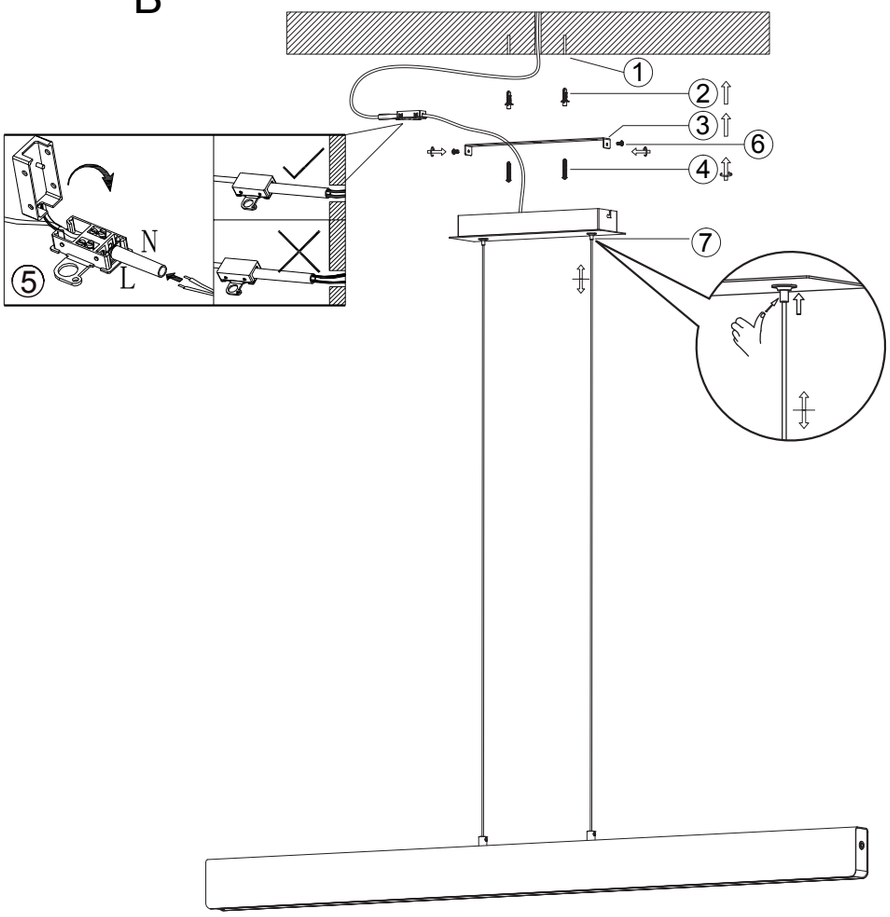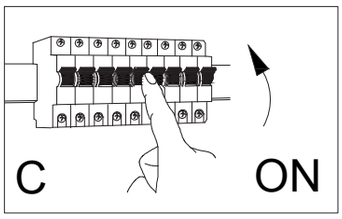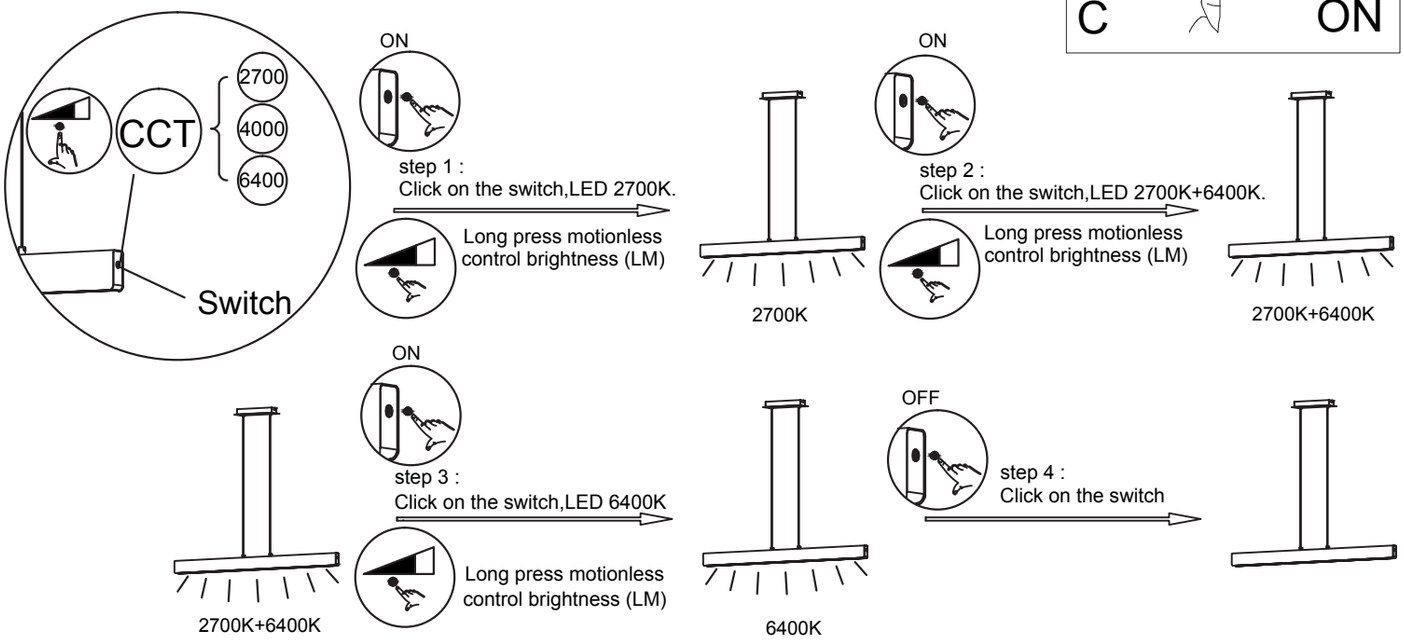
B